QUICK START

RadioShack
www.radioshack.com℠

ENGLISH
43-3822

14-Minute Digital Answering System

Refer to your Owner's Manual for complete instructions.

PREPARATION

Installing a Backup Battery

1. Remove the screw from the battery compartment cover.
2. Attach a 9V alkaline battery to the terminals and place it in the compartment.
3. Replace the cover.

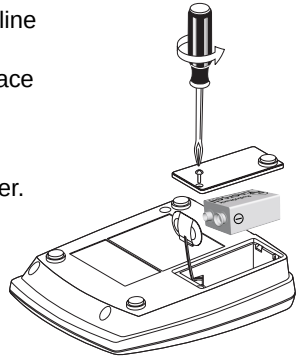

Connecting the System to a Phone Line

Select a location near a telephone jack and an easily accessible AC outlet. The USOC number of the jack to be installed is RJ11C (RJ11W for a wall plate jack).

Connecting AC Power

Plug the AC adapter into a standard AC outlet. The display lights and numbers 01 to 10 appear sequentially on the display. A long beep sounds and 00 appears.

PLAY/PAUSE — Press to play all messages, memos, and 2-way recordings. Press while listening to pause playback.

OGM — Hold down to record an outgoing message.

◀◀/TIME CHECK — Press during playback to repeat the current message. Hold down during playback to repeat the previous message. Press while stopped to hear the current day and time.

▶▶/TIME SET — Press during playback to skip to the next message. Hold down while stopped to enter day/time setting mode.

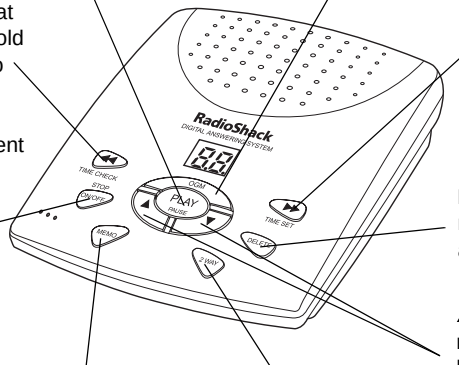

STOP/ON/OFF — Press to turn on the system, during playback to stop, or to turn off the system.

DELETE — Press during message playback to delete a message.

▲ and ▼ — Press to adjust message playback volume higher or lower.

MEMO — Hold down to record messages for yourself or others.

2 WAY — Record both sides of a telephone conversation.

RING SELECT — Slide to **2**, **4**, or **7** to select the number of rings heard before the system answers. Slide to **TS** to avoid long distance charges when calling from a remote location.

PHONE JACK

Modular Phone Line Cord

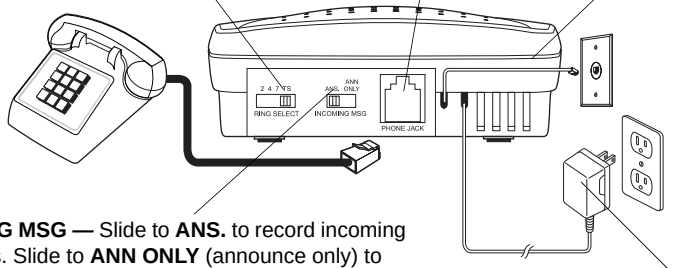

INCOMING MSG — Slide to **ANS.** to record incoming messages. Slide to **ANN ONLY** (announce only) to play your outgoing message without letting the caller record a message.

AC Adapter

OPERATION

Recording the Outgoing Message (OGM)

1. Hold down **OGM** until A1 appears on the display and the system beeps. Speak clearly into the microphone.
2. Release **OGM** when finished. The system automatically plays back your recorded message.
3. Press **ON/OFF/STOP** to turn on the system. When the system answers a call, the outgoing message plays, PR appears on the display, and recording begins.

Playing Incoming Messages

The number of messages flashes after the system records one or more new messages, memos, or two-way phone conversations.

1. *To listen to all messages,* press **PLAY/PAUSE**. The system plays each new message in sequence and announces the day and time the message was recorded. After playing all new messages, the total number of messages appears on the display.
2. *To replay messages,* press **PLAY/PAUSE**. To pause, press **PLAY/PAUSE**. Playback resumes when you press **PLAY/PAUSE** again.
3. To stop playback, press **STOP/ON/OFF**.

RadioShack Corporation
Fort Worth, Texas 76102

© 2002 RadioShack Corporation.
All Rights Reserved.
RadioShack and RadioShack.com are trademarks used by RadioShack Corporation.

10A02
Printed in China